Tanlov hujjatlarining texnik qismining 1-ilovasi

Mahsulot nomi	EPDM die for EPDM sponge part EPDM qolipi EPDM sponge detali uchun
Texnik tavsiflari	Chizmada bor ma'lumotlar
Texnik belgilari (maqsad)	Weatherstrip Rezina jipslovchi mahsulot
Rasm	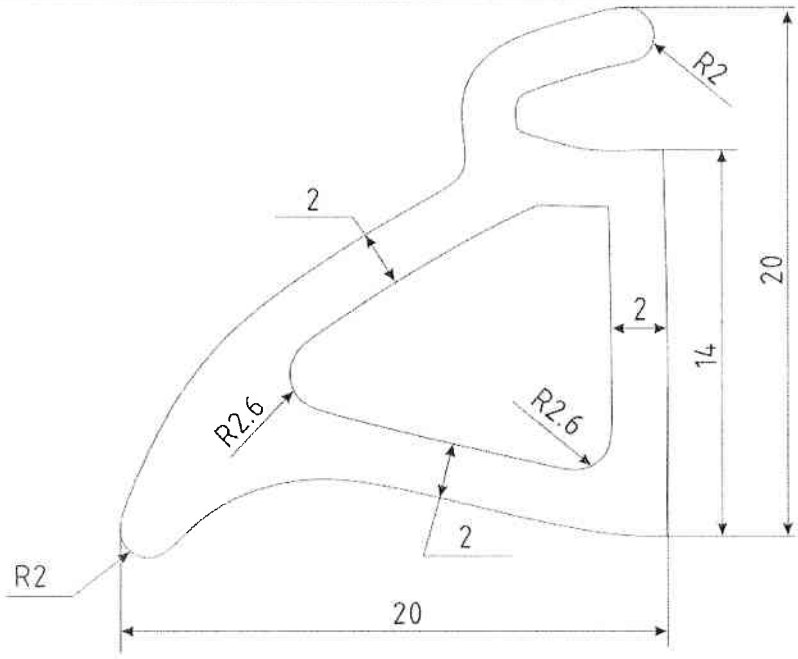
Qo`shimcha ma`lumotlar	DAMAS \ LABO modeli o'rindiq osti jipslovchi rezinasi

Юдашев А.:

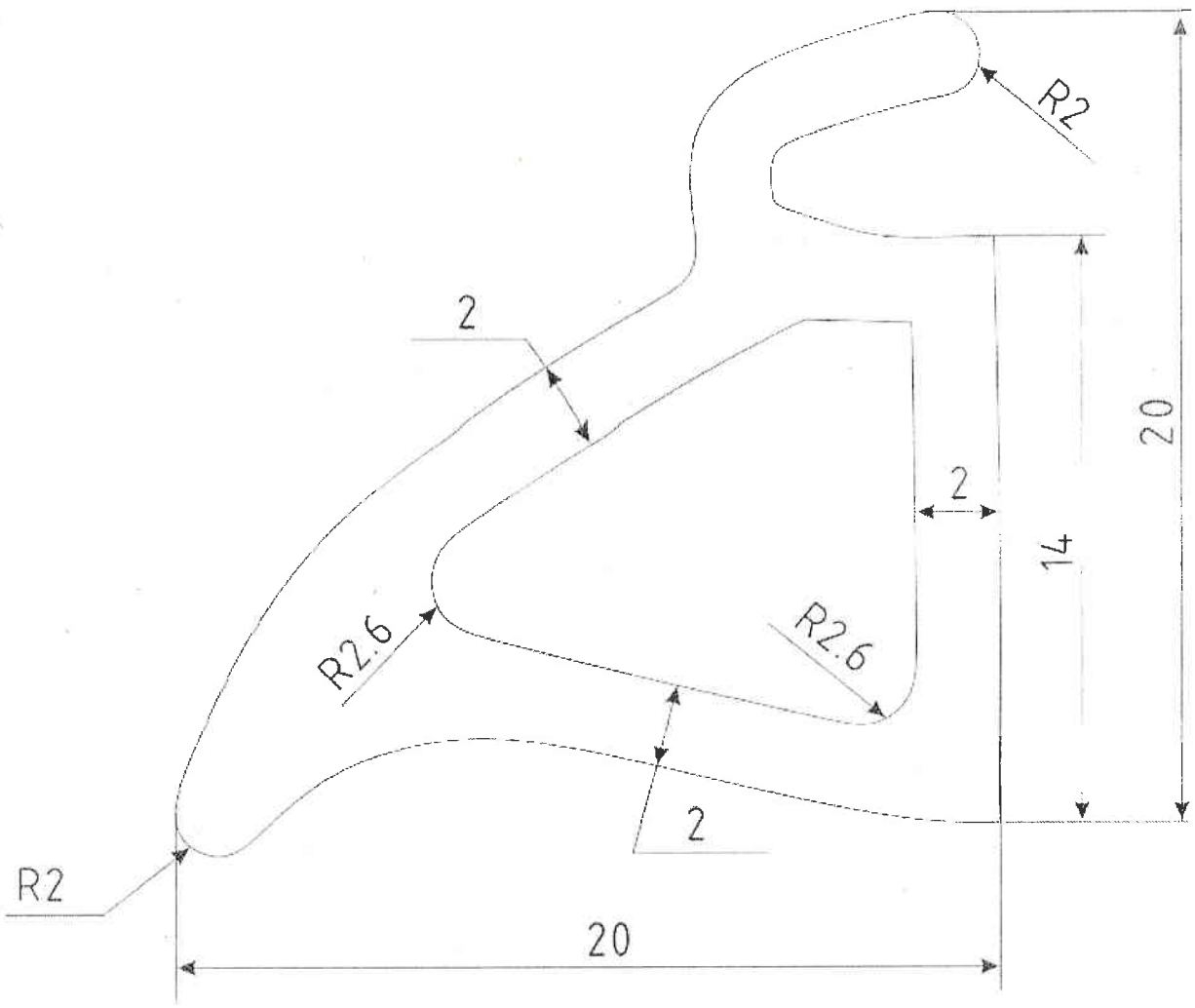
R2
2
20
2
14
R2.6
R2.6
2
R2
20

Tanlov hujjatlarining texnik qismining 2-ilovasi

Mahsulot nomi	EPDM die for Clamp Rubber part EPDM qolipi Clump Rubber detali chun
Texnik tavsiflari	Chizmada bor ma'lumotlar
Texnik belgilari (maqsad)	Weatherstrip Rezina jipslovchi mahsulot
Rasm	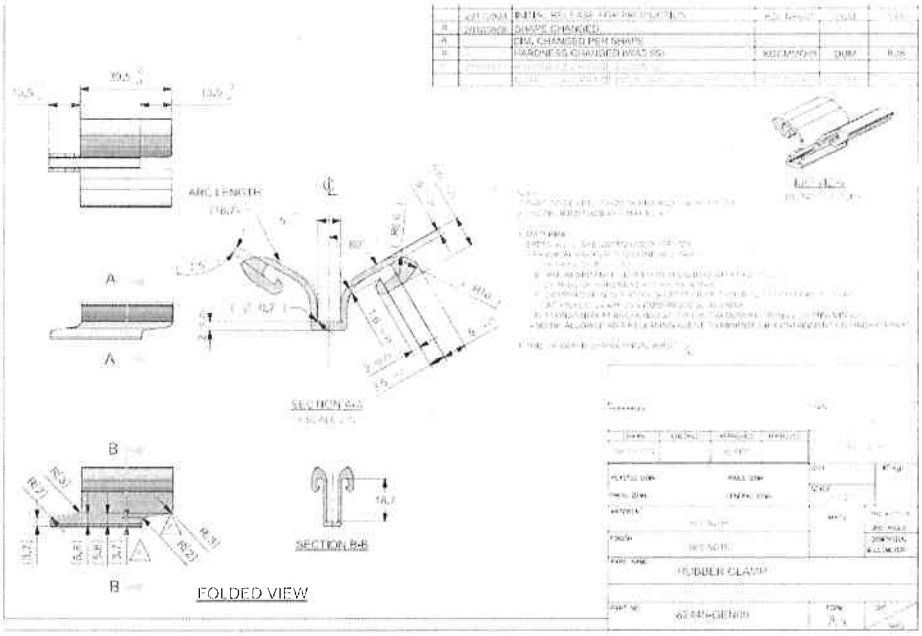
Qo'shimcha ma'lumotlar	BCAR / BSUV modellari oyna ko'targichlari

Ердашев А.:

a.	20180606	SHAPE CHANGED			
a.		DIM. CHANGED PER SHAPE			
a.		HARDNESS CHANGED (WAS 95)	KGEMMO05	DUM	KJB
b.	20190114	HARDNESS CHANGED (WAS 85)			
c.		NOTE ABOUT RETAINING SHAPE [illegible]	[illegible]	[illegible]	

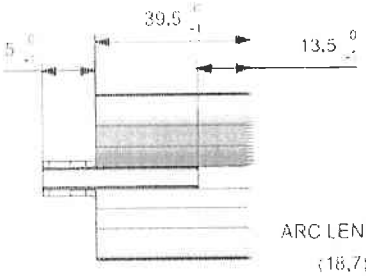

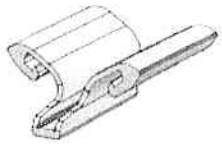

ISO VIEW
(DO NOT SCALE)

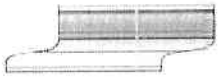

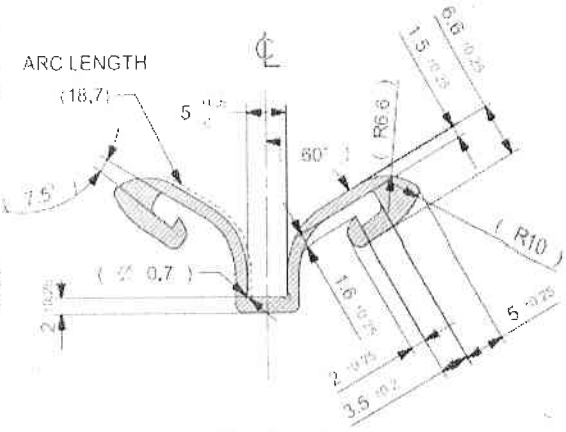

SECTION A-A
(SCALE 2:1)

NOTE:
1. PART TO BE FREE FROM BURRS AND SHARP EDGES.
2. UNSPECIFIED RADII ARE MAX R0.[illegible]

3. MATERIAL
EPDM acc. to SAE J200/2AA807C12F17Z1
- PHYSICAL PROPERTY ON FINISHED PART
A. HARDNESS (ISO 7619-1) [illegible]
B. AGE RESISTANCE (ISO 188 ACCELERATED AGEING AT [illegible])
CHANGE OF HARDNESS +10 SHORE A MAX
C. COMPRESSION SET (ISO 815-1 TEST PIECE TYPE B CUT FROM FINISHED PART
AT 70±3°C 24 HR 25% COMPRESSED 35% MAX
D. ELONGATION AT BREAK (ISO 37 TYPE 1) DIN DUMBELL [illegible] MIN/MIN [illegible]
- NO OIL ALLOWED AS A RELEASING AGENT TO MINIMIZE OIL CONTAINMENT ON FINISHED PART

4. THIS DRAWING IS SYMMETRICAL ABOUT [illegible]

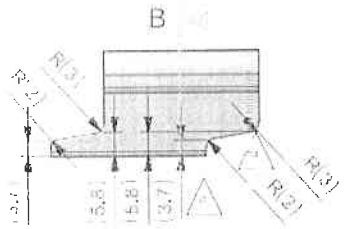

FOLDED VIEW

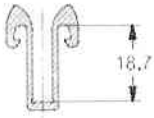

SECTION B-B

REFERANCE				DATE [illegible]
DRAWN	CHECKED	APPROVED	APPROVED	DO NOT SCALE
DU MOON		JB KIM		
PLASTIC DIM:		ANGLE DIM:		QTY
MESS DIM:		GENERAL DIM:		SCALE 1:1
MATERIAL	SEE NOTE			APPV.
FINISH	SEE NOTE			
PART NAME	RUBBER CLAMP			
PART NO	82445-GEN00		FORM A3	SHT 1 OF 1